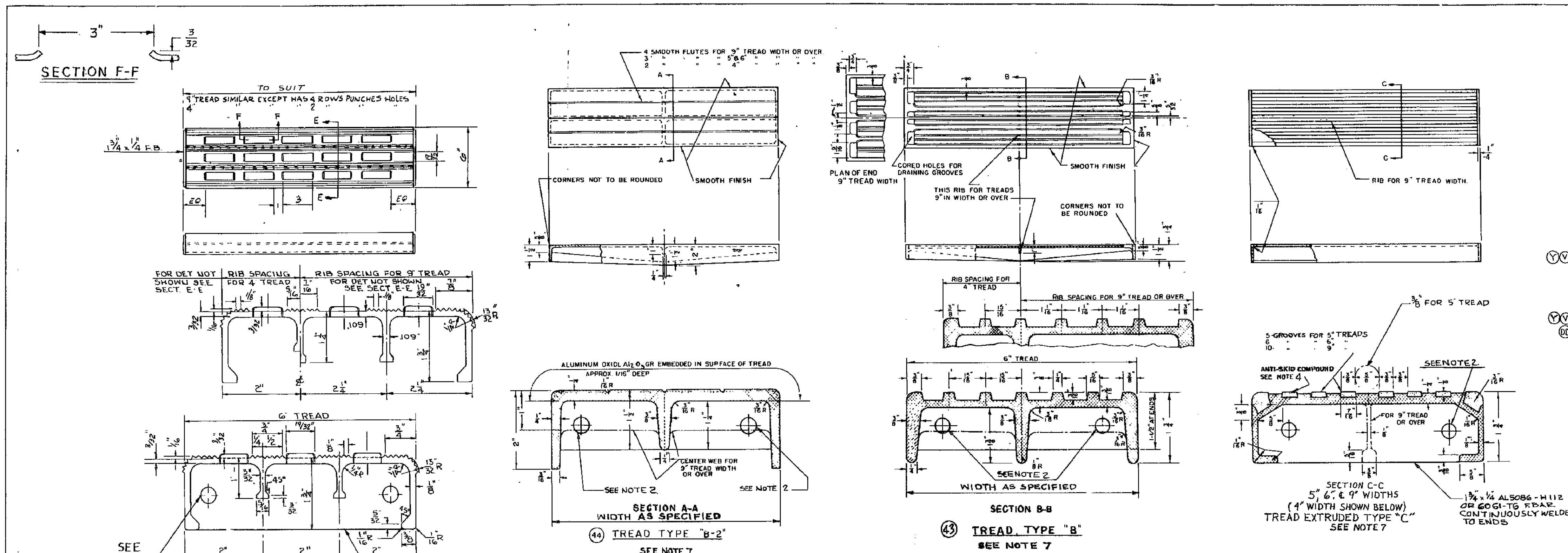

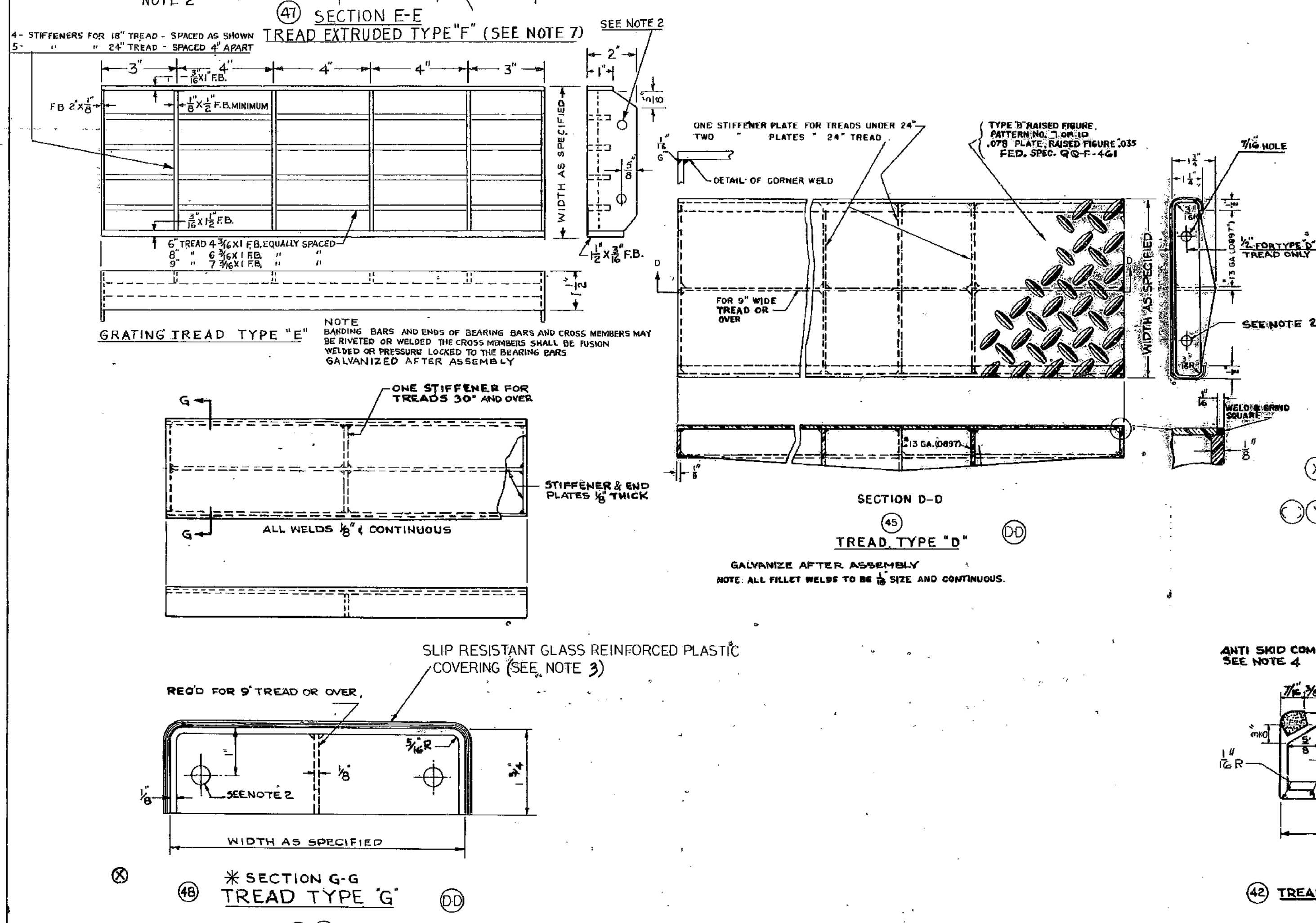

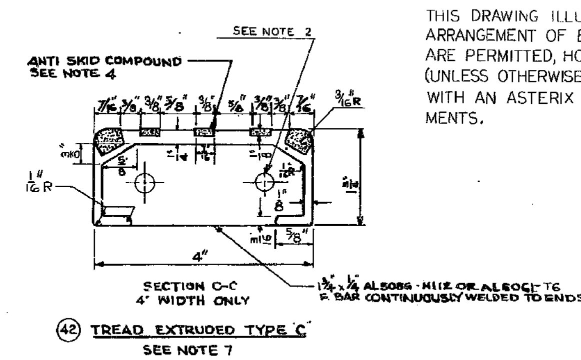

REVISIONS

REV	DESCRIPTION	DATE	COGNT TCH SEC	APPR.
U	REVISED SPEC & MATERIAL FOR PC# 42 & 47. REVISED GEN NOTES & ADDED LIST OF REFERENCES. MODIFIED TYPE "F" TREAD TO SHOW PUNCHED HOLES. ADDED SEC. F-F.	6/21/58	N.Y.N.S. CODE 254	[signature]
V	IN L/M, ALTERNATE MATERIAL AL6061-T6, QQ-A-270 ADDED FOR PC# 42 & 47. (DS 9332-71)	3/59	N.Y.N.S. CODE 254	[signature]
W	ADDED TYPE 'G' TREAD. LIST OF LADDER TREAD SIZES DELETED. GENERAL NOTES REVISED. (DS 9332-92)	11/30/59	N.Y.N.S. CODE 254	[signature]
X	TYPE D & G TREAD MOD. ADDED PC# 49 & NOTE 7	8/16/60	N.Y.N.S. CODE 254	[signature]
Y	IN S/M PC NOS 42 & 47 MOD. GEN NOTE # 8 ADDED. NOTES ADDED TO DWG, AUTH: BUSHIPS LTR 9020/3 SER 633S-1537 OF 26 JULY 1961.	9/12/61	254	[signature]
Z	GEN NOTE #1 & 3 MODIFIED. AUTH: BUSHIPS LTR 9020/3 SER 633SP-770 OF 5 APRIL 1962.	4/9/62	254	[signature]
A-A	GEN NOTE #1 & 3 MODIFIED. AUTH: BUSHIPS LTR S16/4 SER 633A-666 OF 22 APR. 1963.	6/6/63	N.Y.N.S. CODE 254	[signature]
B-B	IN GEN NOTE #1 (TYPE B-2 TREAD) REMARKS MOD. AUTH: BUSHIPS SPO LTR 9164 SER 633A-1237 OF 9/25/63	10/16/63	NYNS CODE 254	[signature]

SCHEDULE OF MATERIAL

Pc No	NAME	PCS	SPEC	MATERIAL	REMARKS
42	TREAD, TYPE "C"	AS REQ'D	COM'L	AL 5086-H112 OR AL 6061-T6	EXTRUDED TYPE
43	TREAD, TYPE "B"	"	COM'L	AL 195-T4	
44	TREAD, TYPE "B-2"	"	COM'L	AL.195 T4	
45	TREAD, TYPE "D"	"	QQ-F-461	STEEL	GALV. TYPE II, PAT. 10810
46	TREAD, TYPE "E"	"	COM'L	STL-A-283-OH C-.35 MAX	GALV
47	TREAD, TYPE "F"	"	COM'L	AL 5086-H112 OR AL 6061-T6	SEE NOTE #6
48	TREAD, TYPE "G"	"	COM'L	STL-A-283-OH C-.35 MAX.	SEE NOTE #3
~~49~~	~~FIBERGLASS TREAD~~	~~"~~	~~COM'L~~		~~SEE NOTE #3~~

GENERAL NOTES

1. SPECIFY TREADS AS SHOWN IN TABLE BELOW:

TYPE TREAD	SHIP SPACES TO BE USED IN: MAGAZINES, AMM HAND, PRESENCE OF INFLAMABLE LIQUIDS OR FUMES.	NON-MAGNETIC	WEATHER DECKS	BELOW WEATHER DKS	MACHINERY SPCS, BOILER RMS, ESCAPE TRUNKS.	REMARKS
B	YES	YES	YES	YES	NO	~~TYPE "C" OR "F" PREFERRED~~
B-2	YES	YES	YES	YES	NO	USE AS REPLACEMENT OF EXISTING TREADS ONLY. USE TYPE "C" OR "F" FOR NEW ALUMINUM LADDERS
C	YES	YES	YES	YES	NO	
D	NO	NO	NO	YES	YES	USE AS A REPLACEMENT ONLY OF EXISTING TREADS OF THESE TYPES. USE TYPE "G" TREAD FOR NEW STEEL LADDERS
E	NO	NO	NO	YES	YES	
F	YES	YES	YES	YES	NO	
G	YES	NO	YES	YES	YES	

*2. ACTIVITY ASSEMBLING LADDERS SHALL DRILL 7/16" D. HOLES FOR FASTENING TREAD TO STRINGER. HOLES SHALL BE LOCATED SO THAT TREAD MAY BE REVERSED.

*3. TYPE G TREADS

3A. FABRICATION

TYPE G TREADS SHALL BE FABRICATED BY THE APPLICATION OF A SLIP-RESISTANT COVER TO A STEEL BASE. THE STEEL BASE SHALL BE FABRICATED OF ASTM A-283 STEEL AND BE ABRASIVE BLASTED TO BRIGHT METAL AFTER FORMING AND WELDING. THE SLIP-RESISTANT COVER SHALL BE FABRICATED BY THE APPLICATION OF THREE SUCCESSIVE LAYERS. EACH LAYER SHALL CONSIST OF GLASS CLOTH, MIL-C-9804, CLASS I, TYPE XII OR TYPE XII A, IMPREGNATED WITH A POLYESTER RESIN, MIL-R-21607, GRADE 2 PIGMENTED HAZE GRAY, COLOR 36270 OF FED-STD-595, AND COVERED WITH ALUMINUM OXIDE GRIT, SIZE 30-40. VOIDS IN COVERAGE OF THE GRIT SHALL NOT EXCEED 1 PER CENT OF THE AREA AND NO SINGLE VOID SHALL EXCEED AN AREA EQUAL TO 1/4 INCH BY 1/4 INCH. (CONTINUED AT LEFT)

GENERAL NOTES CONTINUED

RESIN IMPREGNATION OF THE CLOTH AND GRIT SHALL BE TOTAL AND SHALL BE FREE OF VOIDS. ALL AREAS OF THE STEEL BASE NOT COVERED BY THE SLIP-RESISTANT COVER SHALL BE PAINTED WITH ONE COAT EACH OF FORMULA 150 AND FORMULA 151 OF MIL-P-24441 WITH A .005 IN. MINIMUM TOTAL DRY FILM THICKNESS, FOLLOWED BY TWO COATS OF ENAMEL, FED SPEC TT-E-490, HAZE GRAY COLOR 36270 OF FED STD 595, .001-.002 INCH PER COAT DRY FILM THICKNESS.

3B TESTING

AFTER FABRICATION, THE LADDER TREAD SHALL BE TESTED AS FOLLOWS:

1) WEAR RESISTANCE. WEAR RESISTANCE IS DETERMINED BY SUBJECTING THREE 2 INCH BY 3 INCH SPECIMENS FROM A LADDER TREAD TO 1000 REVOLUTIONS OF THE WEAR TEST MACHINE OF ASTM D 1242, METHOD A. WEAR SHALL BE DETERMINED AT 12 PLACES ON EACH SPECIMEN. AVERAGE WEAR SHALL NOT BE GREATER THAN .050 INCHES, AND SHALL REPRESENT NOT MORE THAN 1/3 OF THE TOTAL THICKNESS OF THE SLIP-RESISTANT COVER.

2) IMPACT RESISTANCE. IMPACT RESISTANCE IS DETERMINED BY PLACING A 6 INCH BY 6 INCH SPECIMEN ON A 15 INCH BY 15 INCH BY 1 1/2 INCH THICK STEEL PLATE AND SUBJECTING THE SPECIMEN TO 25 IMPACTS OF A 2 POUND SOLID STEEL BALL SO THAT THE IMPACTS ARE IN A 5 BY 5 PATTERN SPACED 3/4 INCH APART. THERE SHALL BE NO SIGNS OF DELAMINATION FROM THE BASE, NO INDENTATIONS MORE THAN 1/16 INCH DEEP, AND NO SPALLING MORE THAN 3/8 INCH FROM THE CENTER OF IMPACT.

4. THE ABRASIVE COMPOUND IN THE GROOVES ON TYPE "C" TREADS SHALL BE COMPOSED OF ALUMINUM OXIDE (AL_2O_3) BONDED WITH A SYNTHETIC RESIN, OR EQUIVALENT, APPLIED TO INSURE THE WATER TIGHTNESS OF THIS MATERIAL AND OF THE BOND TO THE SIDES AND BOTTOM OF GROOVE. THERE SHALL BE NO PENETRATION OF MOISTURE INTO THE GROOVES, AND NO CRACKING OR LOOSENING OF THE COMPOUND.

5. TYPES "B", "B-2", C & F TREADS SHALL NOT BE PAINTED UNLESS CALLED FOR IN ORDER. IN NO CASE SHALL PAINT BE APPLIED TO NON-SKID SURFACES.

6. ~~PUNCHED HOLES (SECT "F-F") MAY BE ELIMINATED IN TYPE "F" TREADS IF SO STATED IN ORDER.~~

7. ALUMINUM TREADS SHALL NOT BE USED ON STEEL STRINGERS ABOVE WEATHER DECKS.

8. FLAT BAR ENDS MAY BE OMITTED IF SO STATED IN ORDER.

THIS DRAWING ILLUSTRATES THE GENERAL ARRANGEMENT OF EQUIPMENT. MINOR VARIATIONS ARE PERMITTED, HOWEVER, MATERIAL COMPOSITION (UNLESS OTHERWISE NOTED) AND ITEMS MARKED WITH AN ASTERIX (*) ARE MANDATORY REQUIREMENTS.

REVISIONS CONT'D

REV	DESCRIPTION	DATE	SECT	APP
C-C	DELETED GEN. NOTE NO. 6	1-5-68	257	[signature]
D-D	MODIFIED NOTE 3 FOR TYPE G TREAD. MODIFIED SECT G-G TO ELIM FASTENER, INSTALLED TREAD COVER. MODIFIED SECT D-D TO REMOVE PC 47. CHANGE MATL FOR PC 46 & 48. MODIFIED TITLE BLOCK ARR AND DRAWING NO AND PREFIX. [signature] GGS	3-5-81	SEA 5151	[signature]

REFERENCE DRAWING

1	INCLINED LADDERS, ALUMINUM, DETAILS	BU.NO. 805-1749003
2	" " " ASSEMBLIES	" " 805-1749002
3	ACCOMMODATION LADDER, " FEATHERING TRDS	" " 805-1749043
4	" " " FIXED TREADS	" " 805-1749042
5	GANGWAY	" " 805-1749049
6	INCLINED LADDERS STEEL, ASSEM & DETAILS	" " 1604-860039
7	" " " " "	" " 1604-860040

THIS DWG REPRODUCED FROM BU. NO S1604-860041 REV D

UNLESS OTHERWISE SPECIFIED DIMENSIONS ARE IN INCHES. TOLERANCES ON DIMENSIONS ARE TO BE AS APPROVED BY PROCURING ACTIVITY.

THIS DOCUMENT HAS BEEN APPROVED FOR PUBLIC RELEASE AND SALE; ITS DISTRIBUTION IS UNLIMITED.

CH. DES ENG.	M.D.W.	NYS
BRANCH SUPV.	SNOW	NYS
SEC SUPV	T.M.	NYS
CHECKER	T.M.	NYS
DRAWN	I.S.W.	NYS
SIGNATURE	W.W.A.	NYS

FOR COMMANDER BUSHIP

DATE 2 MAY 1945

DEPARTMENT OF THE NAVY WASHINGTON, D.C.
NAVAL SHIP ENGINEERING CENTER
HULL TYPE DRAWING

INCLINED LADDERS
ALUMINUM AND STEEL TREAD DETAILS

SIZE	CODE IDENT NUMBER	NAVSHIPS DRAWING NO.	REV
H	80064	804-860041	D-D

SCALE: 3", 6" & 12" = 1'-0" WT — SHEET 1 OF 1